SKYZON EVERLITE

2020

Urban Lighting
Ecobra Series



EL-SL08



LM 80 | LM 79 | TM 21 | IP 66 | IK 08

Product Description:

- The Ecobra series are designed with the industrial highest standard, due to its ruggedness and hig h quality, the Ecobra prove to be reliable in the most demanding environments, like costal area of hig h salt concentration, high temperature desert areas, etc.
- With patented housing design and range of optics, Ecobra series luminaire is also a perfect choice for project oriented usage.

Features:

- Super bright COB technology
- Excellent thermal management
- Hig h-quality components
- Wide choice of optics for increased application efficiency
- Available in four sizes
- Robust, Compact, high-pressure die-cast housing to ensure mechanical strength and good thermal performance

Applications

- Highway roads
- Streets
- Parking lots
- Residential areas

Specifications:

EL-SLOB



Model	EL-SL08-1S EL-SL08-1 L EL-SL08-2 EL-SL08-3
Lightsource	COB LED Module
Power	20W/30W/50W/60W/80W 1 00W/120W/150W/180W/200W (Other power upon request)
Luminaire flux	2200-7000Lm(1 S) 6500-12000Lm(1L) 11000-20000Lm(2) 16500-26500Lm(3)
Luminaire eGcacy	110-1401m/W
CCT	4000K (3000K/5000 K/5700K upon request)
CRI	> 70 > 80(upon request)
Lifetime	1 00,000 hours at 2S°C ambient temperature
Operating temperaturerange	-30 to 45°C
Driver	Meanwell (Inventronics optional) Otherbrandofdriver(upon request)
Electrical	Class I or Class II Input voltage: 90-305VAC/50-60Hz,170-305VAC/50-60Hz 1 0KV/20KV SPD Power automactically switch off when opening
Dimming	Dali 1-10V PWM AstroDIMfor autonomous dimming with five independent levels Smart control management system
Options	Photocell Surge protection device (up to 20KV) 0.5mExternal cable(Other lengthupon request) Smart control device Motion detection
Materials	Housing: ADC1 2 die-cast aluminum Cover: Glass lens Screws: 304 stainless screws
Color	Grey/ Black/ white
Tightness level	IP66
Impact Resistance	IK08
Standards & Certifications	CE CB GS IEC ROHS LM80 LM79 TM21 All measurements in TUV sud Laboratory

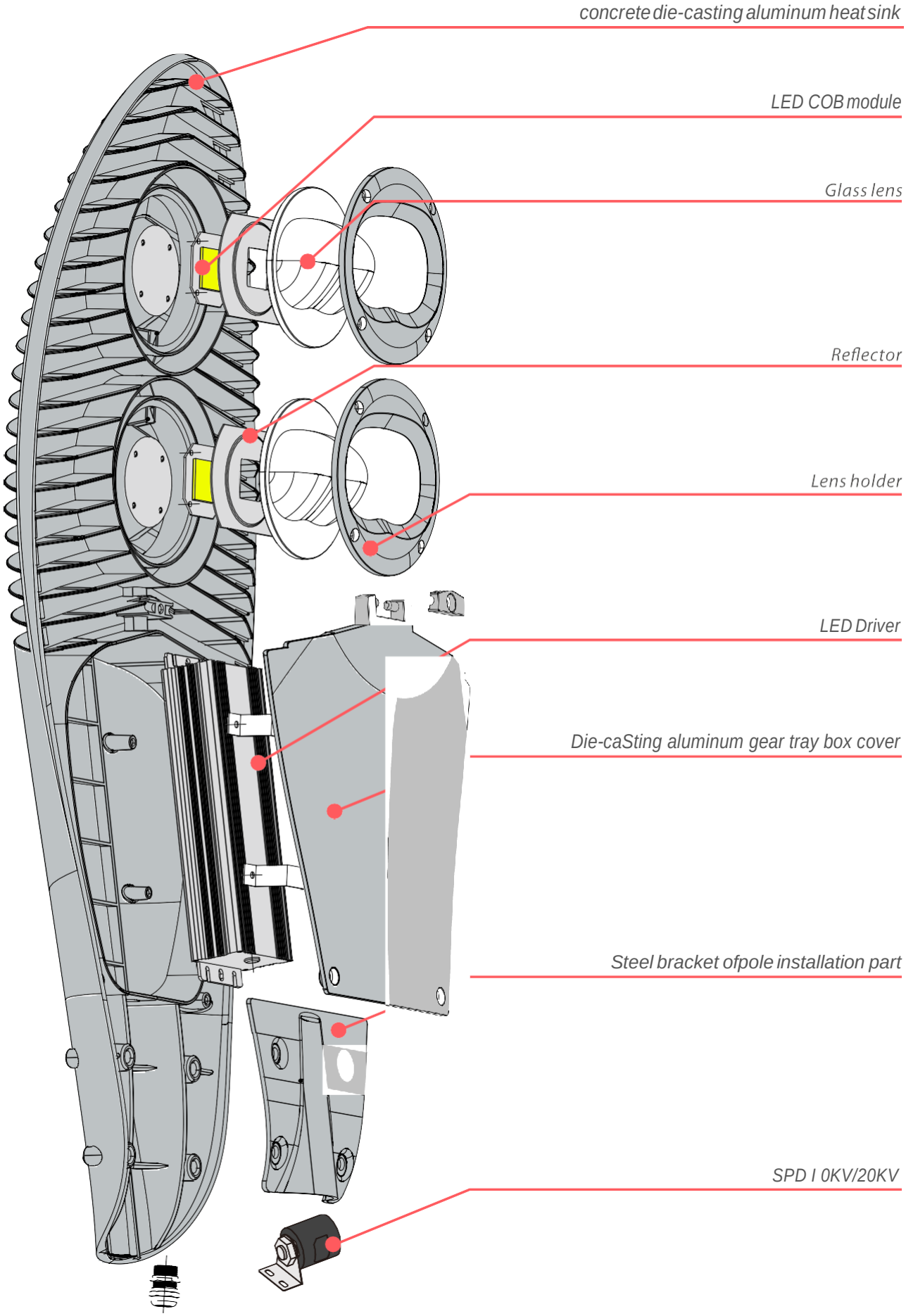
concrete die-casting aluminum heat sink
LED COB module
Glass lens
Reflector
Lens holder
LED Driver
Die-caSting aluminum gear tray box cover
Steel bracket ofpole installation part
SPD I 0KV/20KV

Lens & Light Distribution

- The Ecobra series outdoor luminaire are original designed by EVERLITE R&D team, thls luminaire Set up a industrial bench mark oI outdoor srreet light using high efficiency COB led. To optimize the output from the COB LED and deliver the best performance of light to the right angles, the R&D team spent years on the optic management System S, OFId finally there are in total 5 different optic lens are available. With those 5 different optic lens, the Ecobra could meet almost all level of street light illuminance requirements.
- The glass lens are made from high brightness and clear glass, with an specia/ designed optic lens holder and silicon gasket, the optic system compartment are fully Sealed with Ip66. Thus the COB led are ful/yprotected from moisture damage.

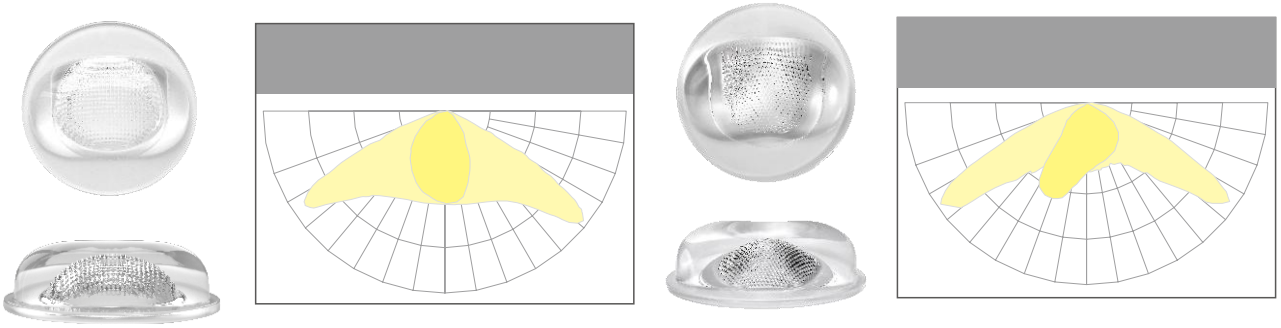

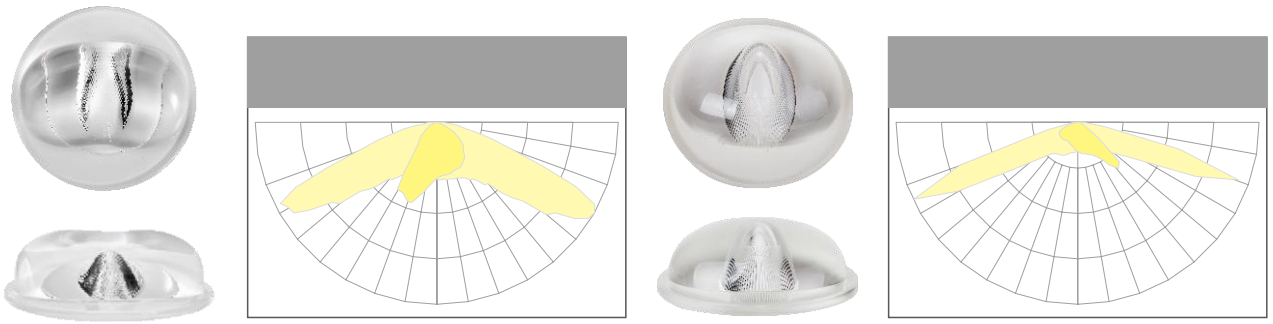

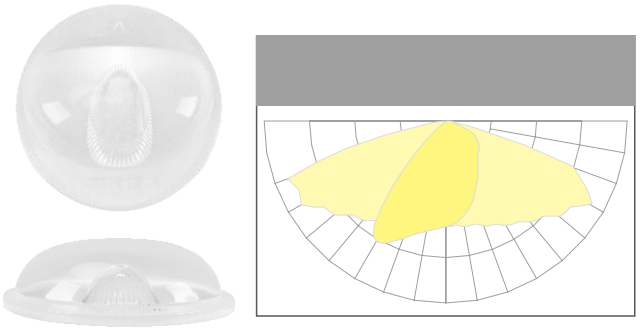



Optics can be customized according to requirements.

Pictures:



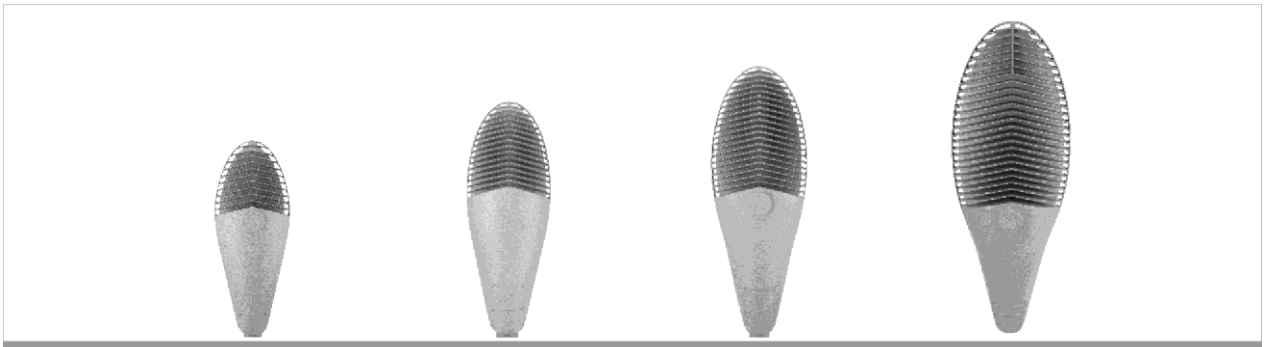

EL-SL08 Back view

Photocell (optional)





Patent lens series

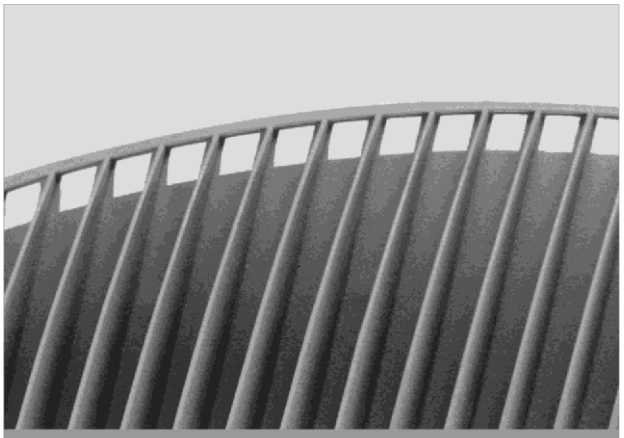

Fins design integrated die-casting,
better heat dissipation

Product size:

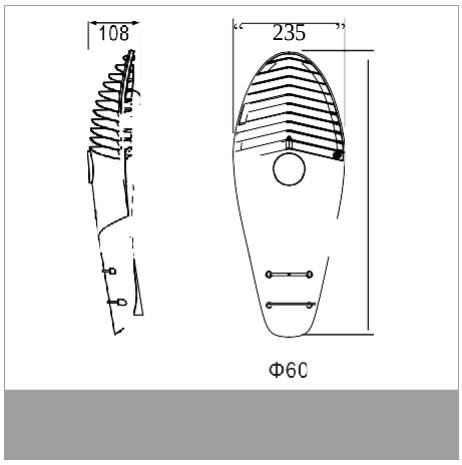

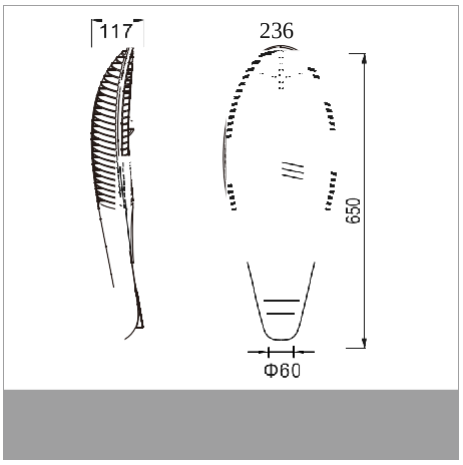

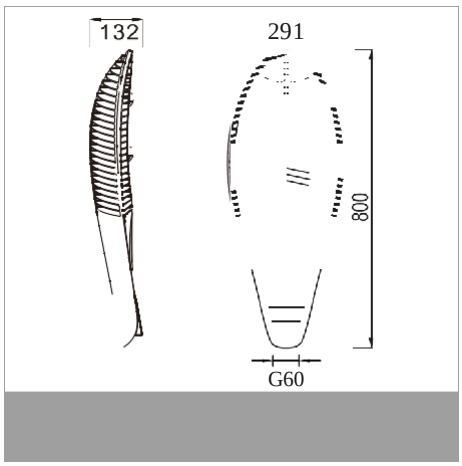

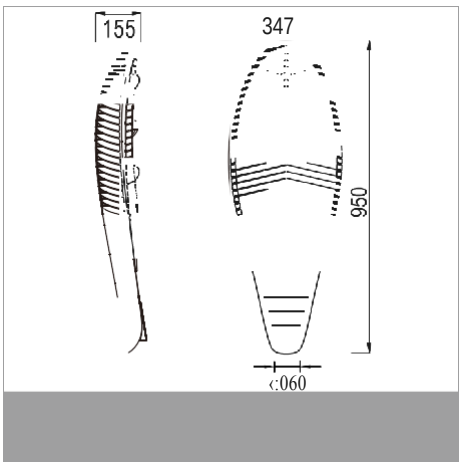

Installation:

-The Ecobra luminaire is designed to be side-entry mounted, or it could be also post-top mounted by using a angle tilt bracket.
-2 installation pipe diameters are available, 60mm or 76mm.
- Please look at the following information to finish installation.

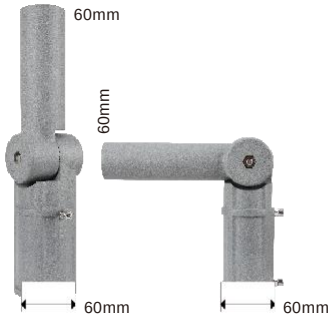

(60mm)

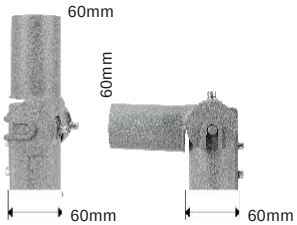

(60mm)

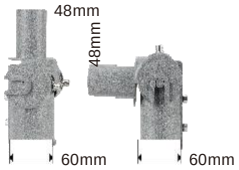

(48 Adapt to 60mm)



(60 Adapt to 76 mm)

Packaging:

Model	Carton Size(mm)	N.W.(Kg)	G.W.(Kg)
EL-SL08-1 S	650x280x160	4.0	4.8
EL—SL08—1 L	705x290x160	4.3	5.4
EL-SL08-2	860x330x160	6.7	8.0
EL-SL08-3	1005x400x210	10.5	12.5









Warranty:

- 5 years limited warranty is standard on luminaire and components.

Project Cases:









